ACTIVITY: Diodes

Part 1

1. Obtain a diode (e.g. 1N4004 or a LED) from the instructor/TA and devise a technique to determine its polarity using the Mobile Studio board. Check your results with the DMM in the lab.

2. Using the AWG1 of the board as the circuit's V1 input (with the following settings: .5KHz, triangle, DC offset = 1.5v, Vp-p = 3v), a resistor (R=100 ohms) and a diode; determine the diode voltage when i_{Diode} = 2mA, 4mA, 6mA and 10mA.

3. How to automate this process using the X/Y mode of the board:
   - Acquire i_{Diode} via measuring the differential voltage across the resistor (R=100) using Channel 2 (set channel 2's input to 400mv/div, DC coupling, A2 DIF input – use the down arrow to lower the trace placement as seen in the following figure, -3div)
   - Acquire v_{Diode} directly using Channel 1 (set channel 1's input to 250mv/div, DC coupling, A1 SE input)
   - Set the Horizontal timebase to 100us/div and place the trigger at the onset of the V_{Diode} (trigger position marker is the red line on the left of the scope screen, you can drag it up and down).
   - Mobile Studio Settings File: http://www.mobilestudioproject.com/DiodestudyMobileStudiosettings.iob
   - Save your Y-T waveform data by clicking the "Disk" icon on the Mobile Studio toolbar (just above the scope screen – *circled in the figure below in orange*) – **reduce the file size by saving 1 out of every 5 points**. Import the data into Excel and plot the i_{diode} vs. v_{diode} data *(i_{diode} can be obtained from the voltage across the resistor)*.

4. Determine V_{D0} and r_D for the diode, making the piecewise-linear model fit the curve exactly at i_{Diode} = 4mA and 8mA.

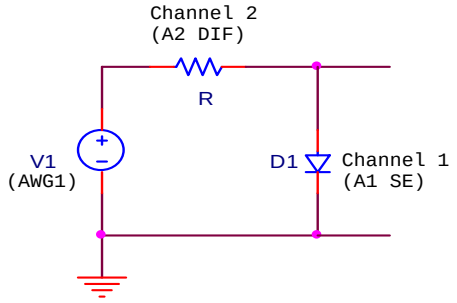

Circuit Setup

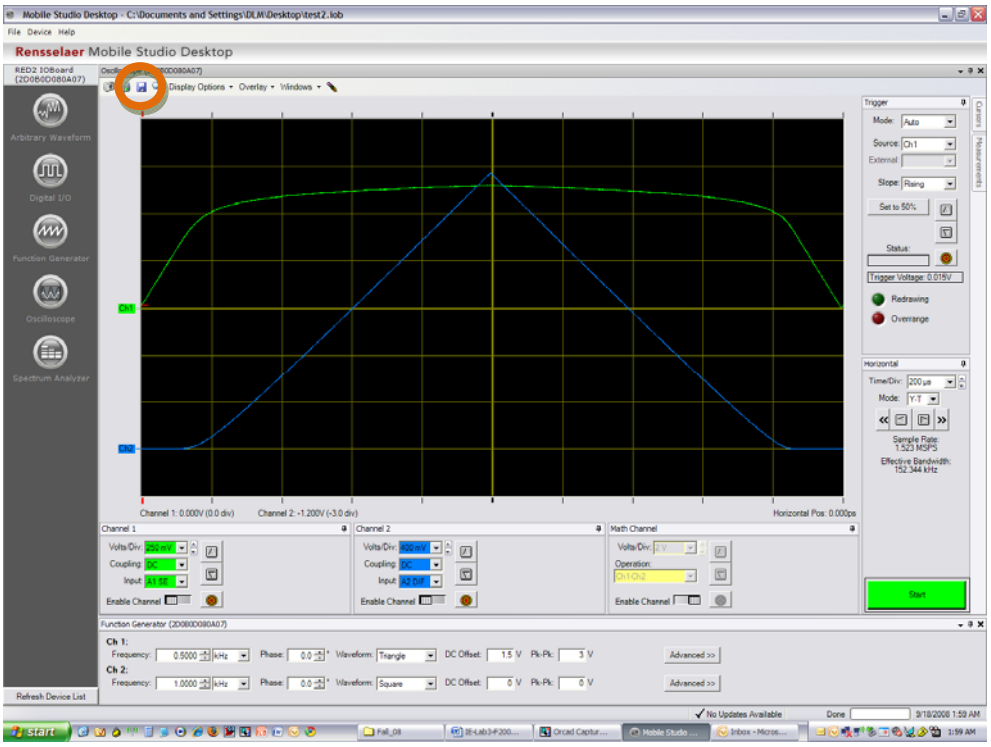

Y – T Mode Screen Setup

(*Settings file:* http://www.mobilestudioproject.com/DiodestudyMobileStudiosettings.iob)

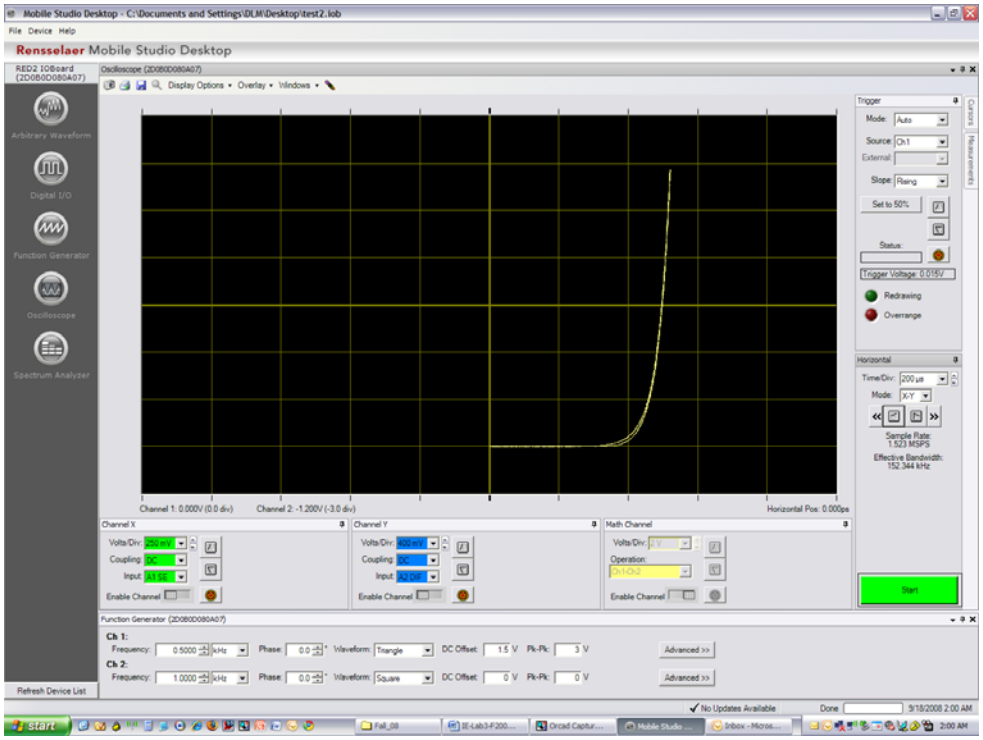

X – Y Mode Screen Setup

Part 2

Build the circuit below with V_{in} using AWG1 (w/ $V_{sine} = 6V_{p\text{-}p}$, $f = 440Hz$) to provide the input.

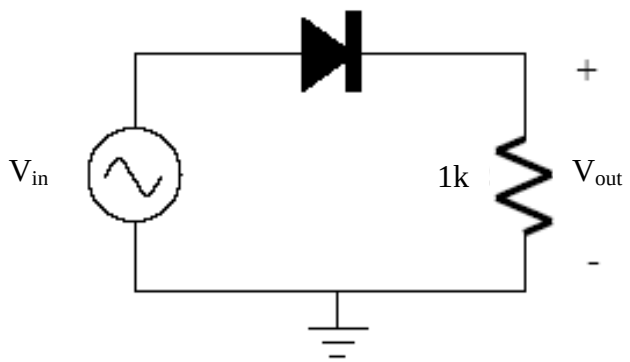

Questions:

1. What is the AC voltage amplitude and the waveform period at the output?
2. Observe the output waveform and compare it to the input. What differences do you see?
3. Insert a 10uF capacitor in parallel with the resistor. What is the change in the output waveform?
   NOTE: Please make certain that the capacitor polarity is CORRECT!
4. Replace the 10uF with a 33uF capacitor, how the output is affected?

Part 3 (this part can be done outside of class)
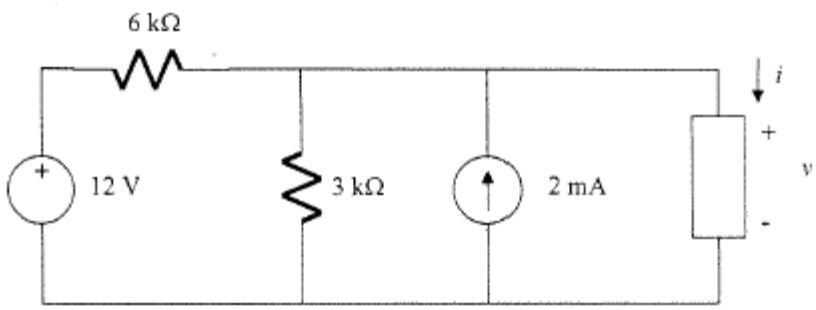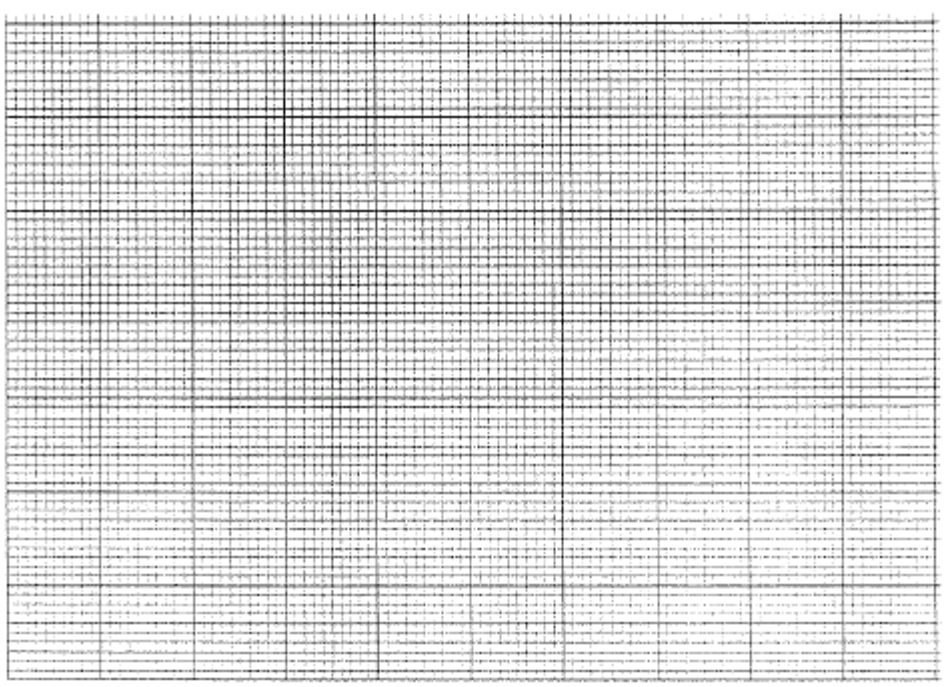
The circuit below uses a non-linear device for which $i=v^{1/2}$ (with i having units of mA). Use graphical analysis to find the voltage v.