BJT Amplifier Configurations

Part 1

Construct the circuit shown below in PSpice using the 2N2222 npn BJT.

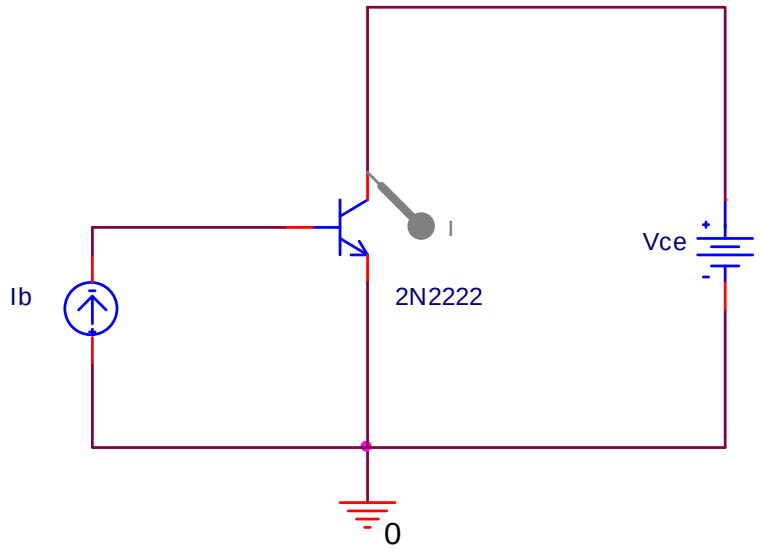

1. Produce a plot of I_b vs. V_{be} while sweeping V_{be} from 0v to +3v.
2. Produce a plot of I_c vs. V_{ce} while sweeping V_{ce} from 0v to +4v with I_b varying at from 0 to 18uA.
3. Print your results and draw a load line on the I_c vs. V_{ce} plot; assuming that you will be using the transistor in a common-emitter amplifier circuit with $R_C = R_E = 1k$ and $V_{CC} = 4v$.
4. Identify the Q point that would result if you use 10k resistors to bias the base of the transistor as shown in Part 2.
5. What is the current gain (β) and resistance (r_π) of the transistor with this biasing arrangement?
6. Develop the small signal model that you would use to predict the voltage gain of a CE amplifier that uses this transistor.

PART 2

Protoboard the common emitter (CE) amplifier shown in the following circuit using a 2N2222 npn BJT.

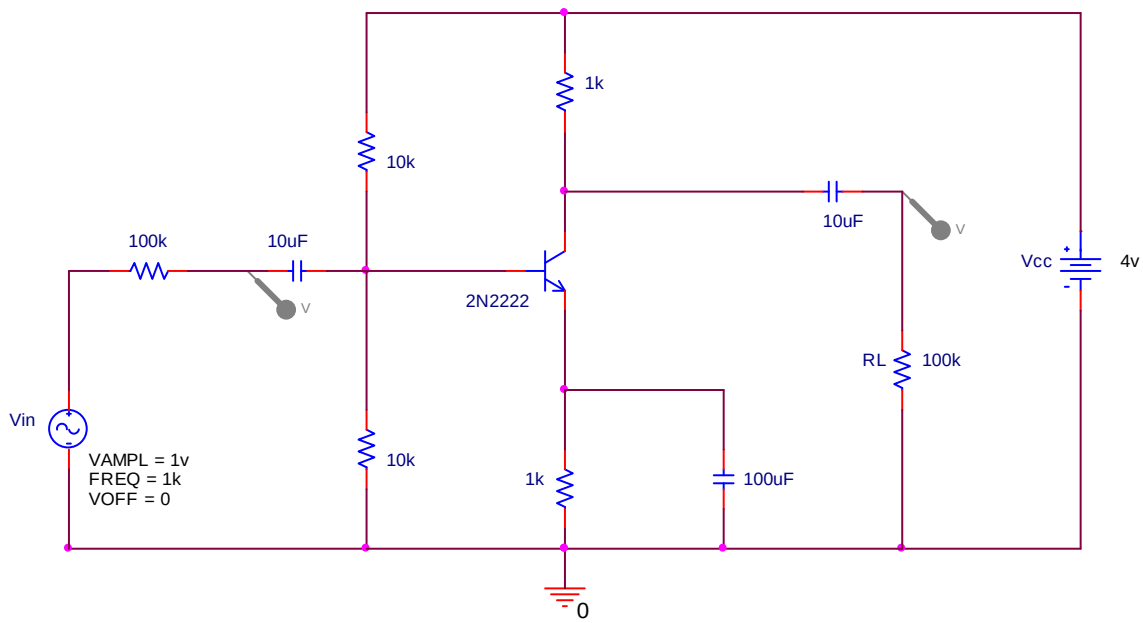

1. Using the scope, measure V_{in} and the voltage at the probe on the left (at the input). Use these voltages to estimate the input resistance of the amplifier, R_{in}.
2. To estimate the open circuit voltage gain, insert a very large (1meg or infinite) resistor for RL and apply a 1 Vp-p, 1 kHz sinusoidal input signal. Using the oscilloscope, measure the voltages at the two probe locations (v_i and v_0) and compute $A_{vo} = v_0/v_i$.
3. Replace RL with a 100 ohm resistor and measure v_0. Using this result and the value of v_0 measured above, estimate the output resistance of the amplifier, R_0.
4. Replace RL with a 1K ohm resistor and measure the overall gain $G_v = v_0/v_{in}$. Also calculate what G_v should be based on your knowledge of R_{sig} (from the function generator's output resistance), RL, A_{vo}, R_{in} and R_0. Does your answer agree with your measured voltage gain?
5. Find the AC voltage gain of the amplifier, A_v, taken at the two probe locations.
6. Determine the loading factors at both the input and output of the amplifier.
7. What changes would result if the 100k source resistor was replaced with a 10k resistance? Capture and explain your results.

PART 3

The common collector (CC) amplifier (also known as an emitter follower) showed below uses a 2N2222 npn BJT.

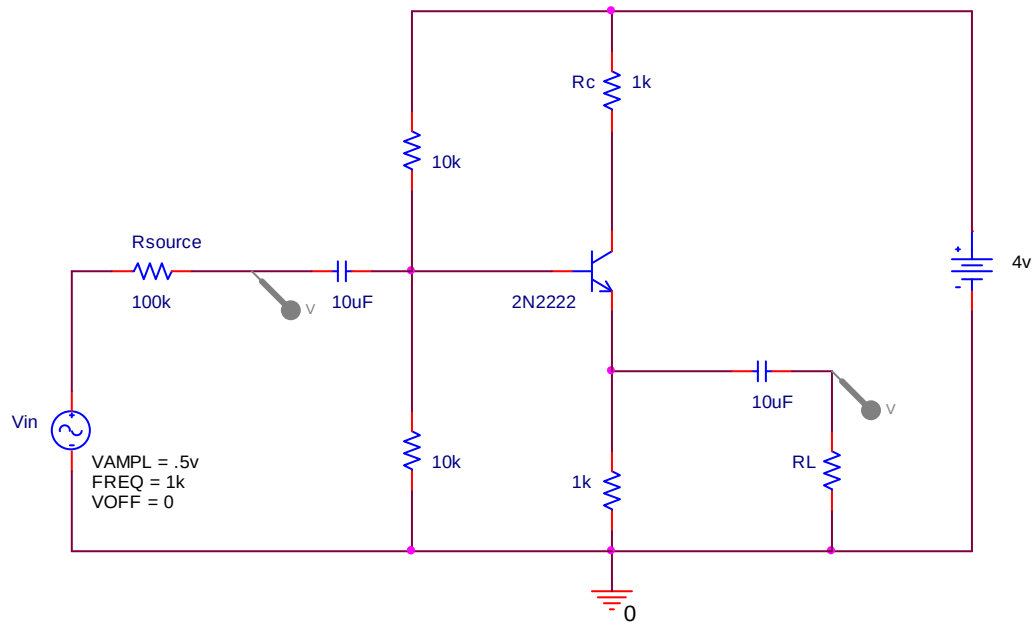

1. Calculate the *Q*-point values of I_B, I_C, and v_{CE} and then build the above circuit and measure those quantities.

2. Estimate the open circuit voltage gain by inserting a very large (1meg or infinite) resistor for RL and applying a 1 Vp-p, 1 kHz sinusoidal input signal. Using the oscilloscope, measure the voltages at the two probe locations (v_i and v_0) and compute $A_{vo} = v_0/v_i$.

3. Replace RL with a 100 ohm resistor and measure v_0. Using this result and the value of v_0 measured above, estimate the output resistance of the amplifier, R_0.

4. Replace RL with a 1K ohm resistor and measure the overall gain $G_v = v_0/v_{in}$; using an R_{source} = 1k.

5. Calculate what G_v should be based on your knowledge of RL, A_{vo}, R_{in} and R_0. Does your answer agree with your measured voltage gain? What happens when R_{source} is reduced to 1k? Explain your results.

6. What changes in the circuit's performance would occur if R_c was changed from 1k to a short?